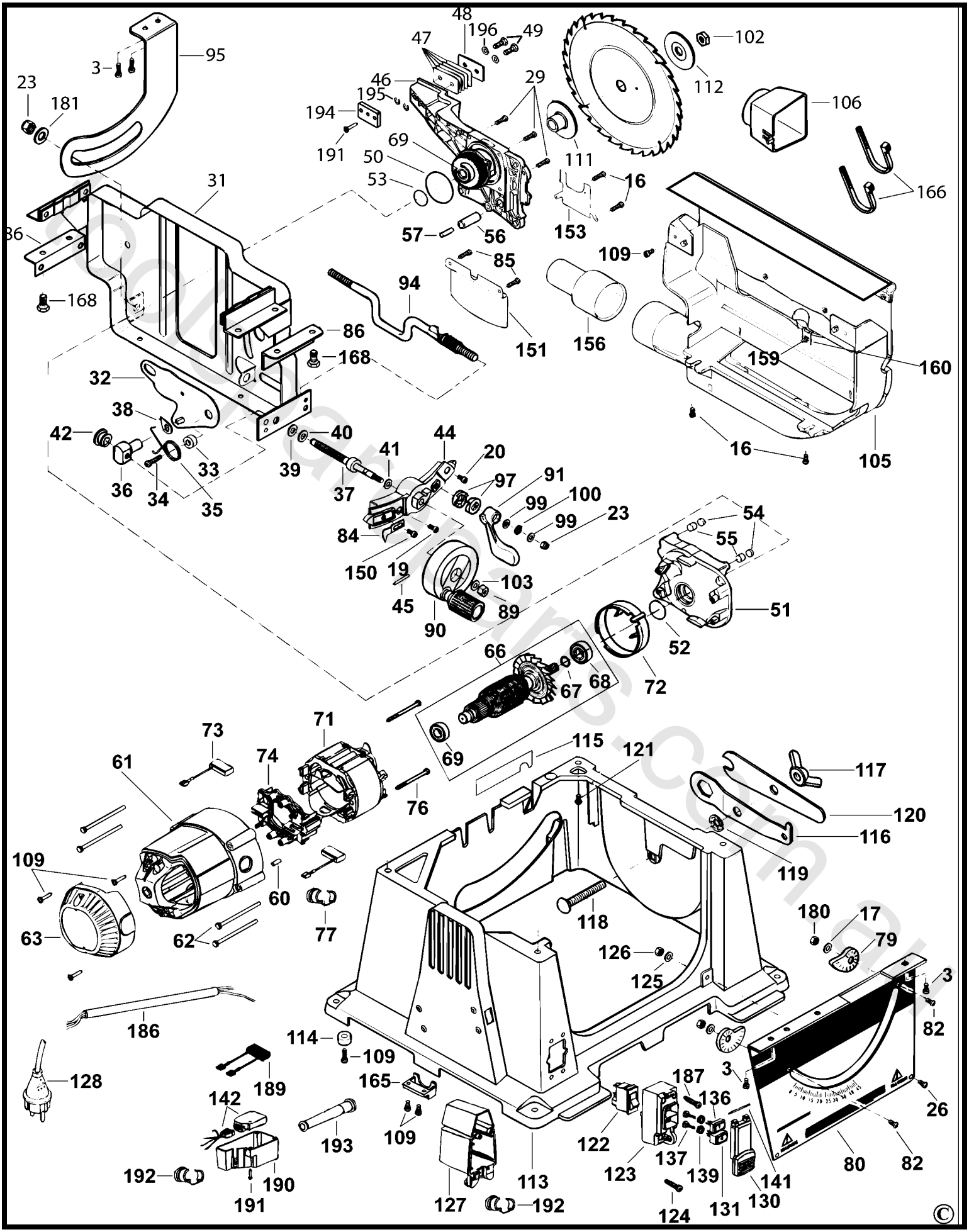DW744XP Motor & table TABLE SAW 3